LightLEEDer EVO Controller
Wiring Details

Motion Sensor

EVO Input wiring

BLACK - COM

BLUE - IN

RED - +24V

Black = Common
Blue = Return signal
Red = +24VDC

INPUTS

INPUT 4: COM, IN, +24V
INPUT 3: COM, IN, +24V
INPUT 2: COM, IN, +24V
INPUT 1: COM, IN, +24V

Push input lock button to open the wire hole jaw, insert wire.

Photo Cell inputs are powered at 5VDC
Maximum range of 3,000 feet to sensor

PHOTOCELLS

PC 2: BLK, BLUE, RED
PC 1: BLK, BLUE, RED

ILC - Photo cell
Black = Common
Blue = Digital return
Red = +5VDC

BLACK
BLUE
RED

BLACK (OFF) - INPUT 2

RED (ON) - INPUT 1

YELLOW - +24V

Top lug = Off
Center = Power
Bottom lug = On

Override Switch

Up - On

Center

Down - Off

Inputs can be used for motion sensor(s) or override switches
24VDC power 200mA maximum for all 4 input combined.
#18AWG wire at maximum distance of 1,000 feet

Momentary SPDT center off toggle switch shown
3-wire connection requires 2 inputs.
Optional: maintained switch or momentary push button
uses a 2-wire connection (+24VDC to Input).

Local LS - RJ-45 for CAT-5 Cable Connection
to LightSync Switches or Devices

RJ-45 Connectors for CAT-5 Cable
to R20 Remote Relays at maximum distance of 100 feet

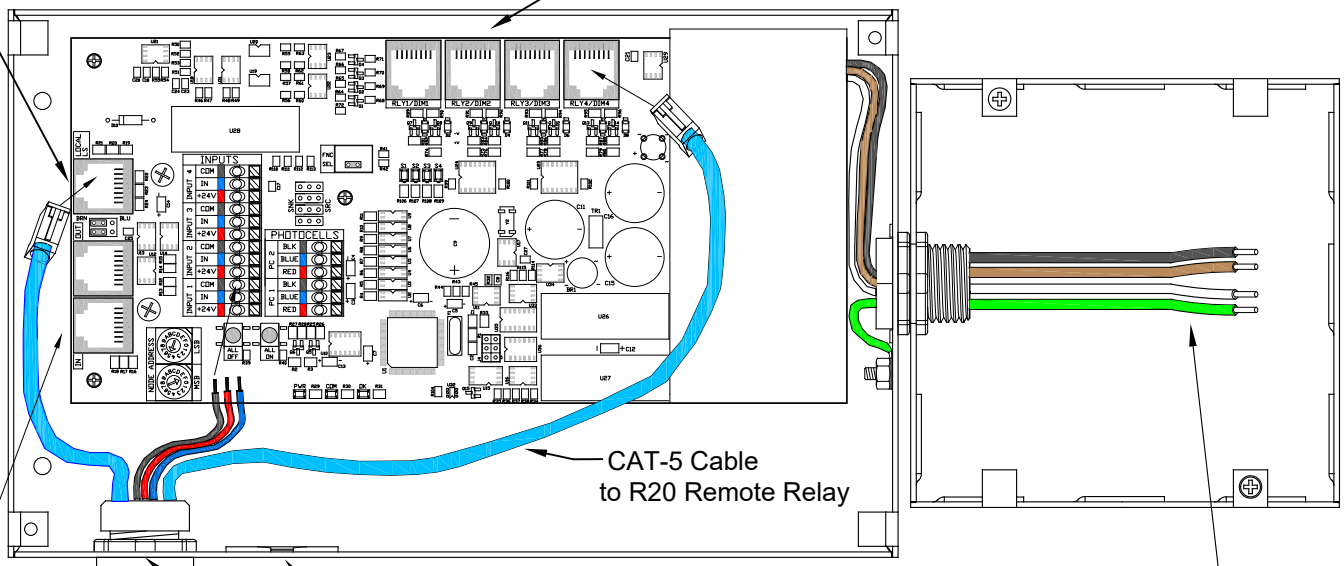

CAT-5 Cable
to R20 Remote Relay

Black = 120V
Brown = 277V
Orange = 347V (Optional)
White = Neutral
Green = Ground

1/2" and 3/4" Knock-outs
for Low Voltage Conduit and
Wiring Connection

RJ-45 for CAT-5 Cable Connection to Other
LightLEEDer Panels When Networked